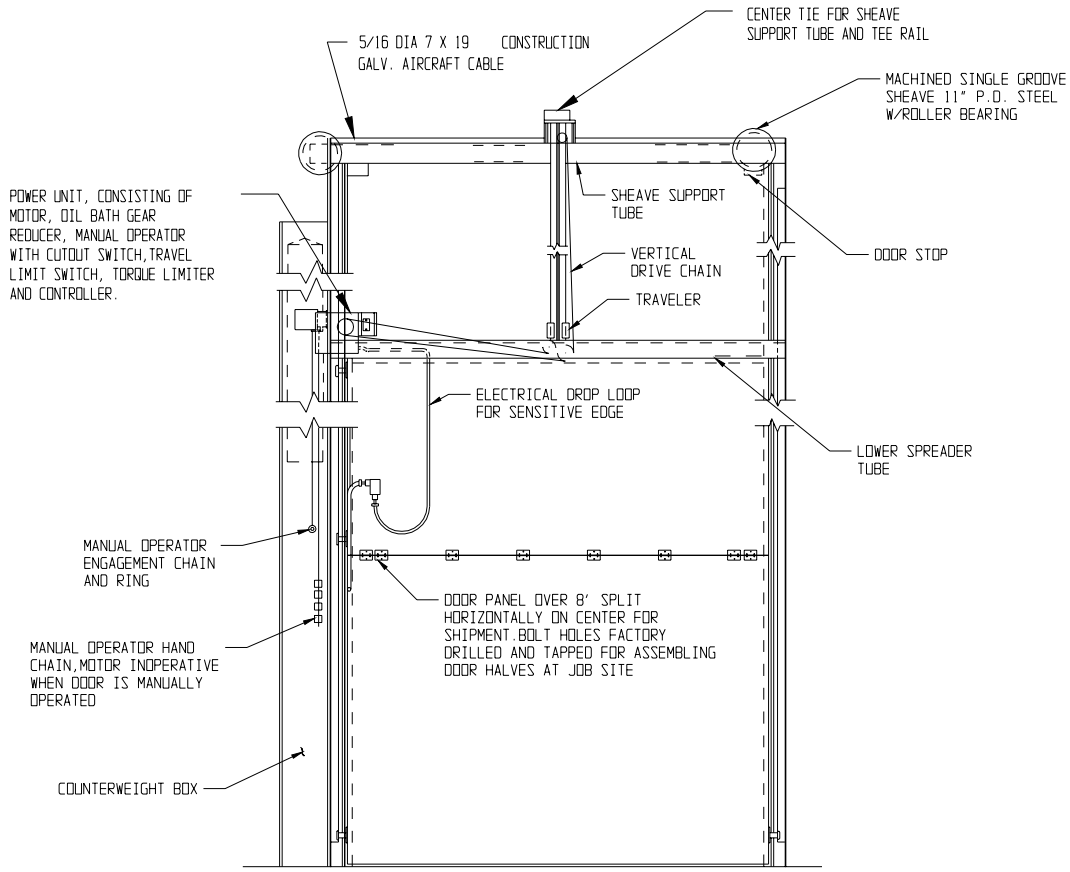

FRONT ELEVATION

DOOR SHOWN WITH COUNTERWEIGHT & POWER UNIT ON L.H. SIDE

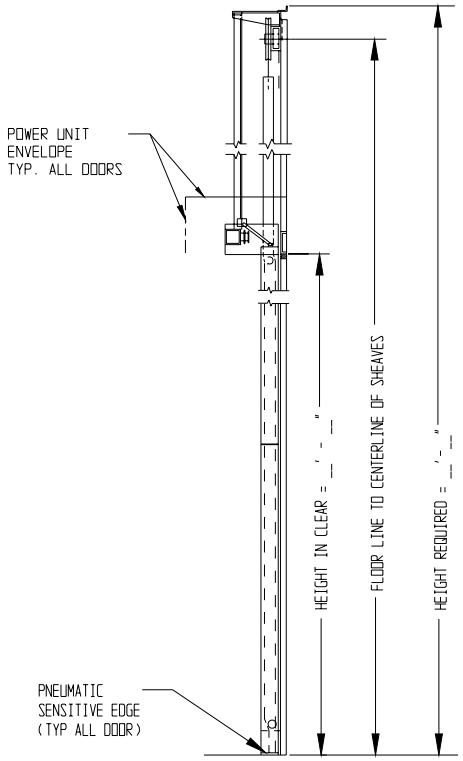

VERTICAL SECTION

POWER UNIT NOT SHOWN

DO NOT SCALE SCALE(S)	JOB NAME		
DATE 7/6/92	DRAWN BROWN	SOUND REDUCTION AND SPECIAL SALES	
CHECKED	APPROVED	TITLE	LTR / DATE / BY / SUBJECT
JAMISON DOOR COMPANY P. O. BOX 70 HAGERSTOWN, MARYLAND 21741		VERTICAL SLIDING "S.T.C. 51" SOUND REDUCTION DOOR	REVISIONS NO. CH-4424-17